www.institutionalbasketballsystems.com
Tom Nicotera
877-272-5430

First Team Renegade Select

- Several backboard options
- Optional bolt-on all weather backboard padding
- Backboard braces for superior backboard rigidity
- Post to backboard extension distance is 48"
- Post is weather resistant zinc-coated
- Heavy-duty 4.5" outside diameter schedule 40 post
- Post is buried 48" below playing surface
- Goals are direct mount to eliminate backboard stress

The Renegade offers exceptional durability at a price that meets any budget. The Renegade is a "Fixed Height" pole system constructed of 4 1/2" outside diameter galvanized schedule 40 tubing and a 48" direct bury post. Though sold as fixed height, the extension arm can be affixed at any height desired. The direct rim mount design allows the rim to be mounted through the backboard and into the post, eliminating backboard stress. The backboard is further supported by two tubular braces fixed to the neck of the post. Our unique "nose-cone" backboard mounting design makes backboard installation simple.

RENEGADE SELECT - 4.5" OD schedule 40 steel post, 48" post to board extension, 36x60x1/2" clear acrylic board, heavy duty breakaway goal (fixed unbreakable double rim goal also available), net

Includes all mounting hardware and installation instructions.

FIRST TEAM SPORTS INC.
HUTCHINSON, KS 67501

RENEGADE BASKETBALL GOAL
PRODUCT SUBMITTAL
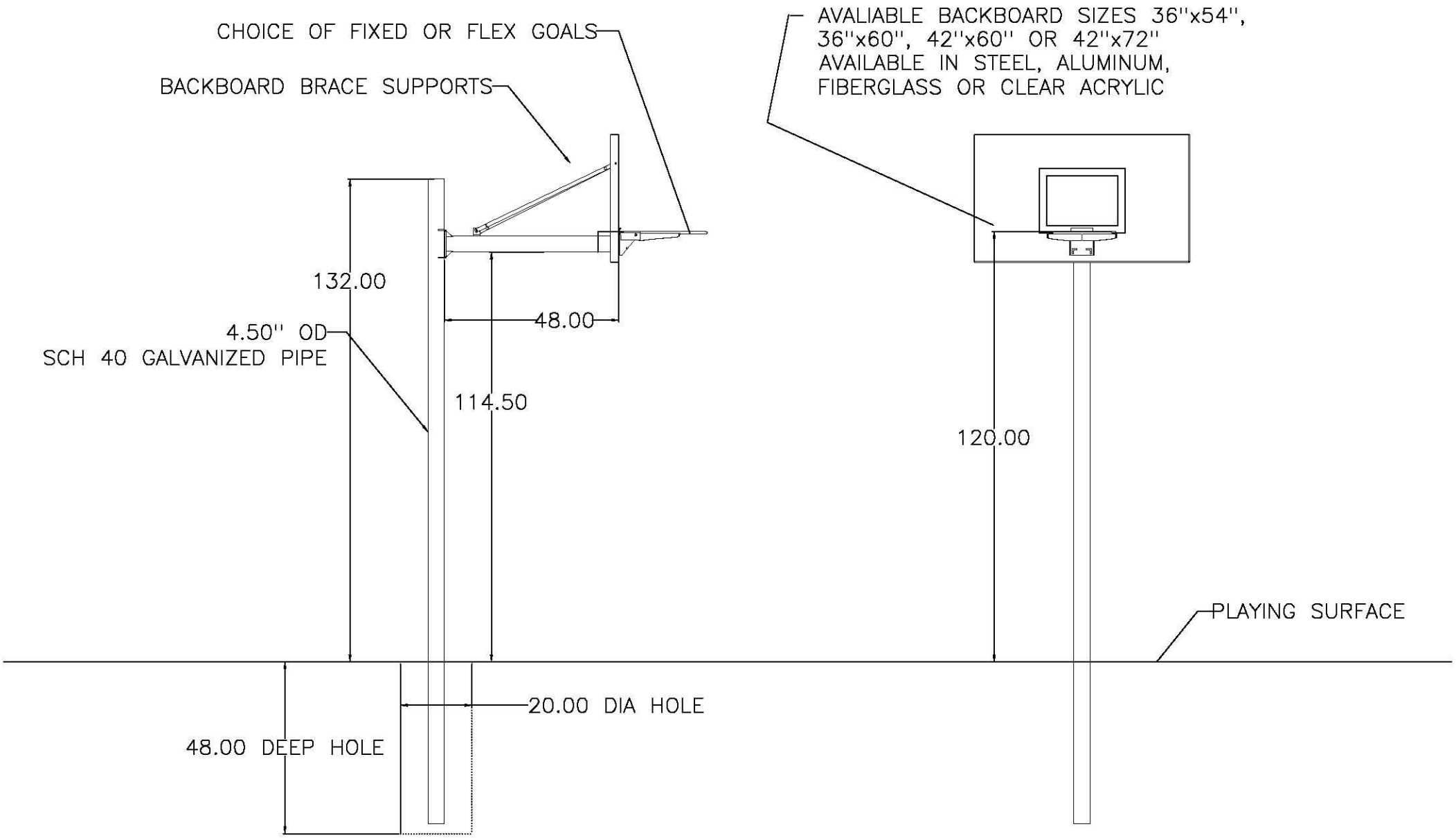
www.InstitutionalBasketballSystems.com | Tom Nicotera | 877-272-5430